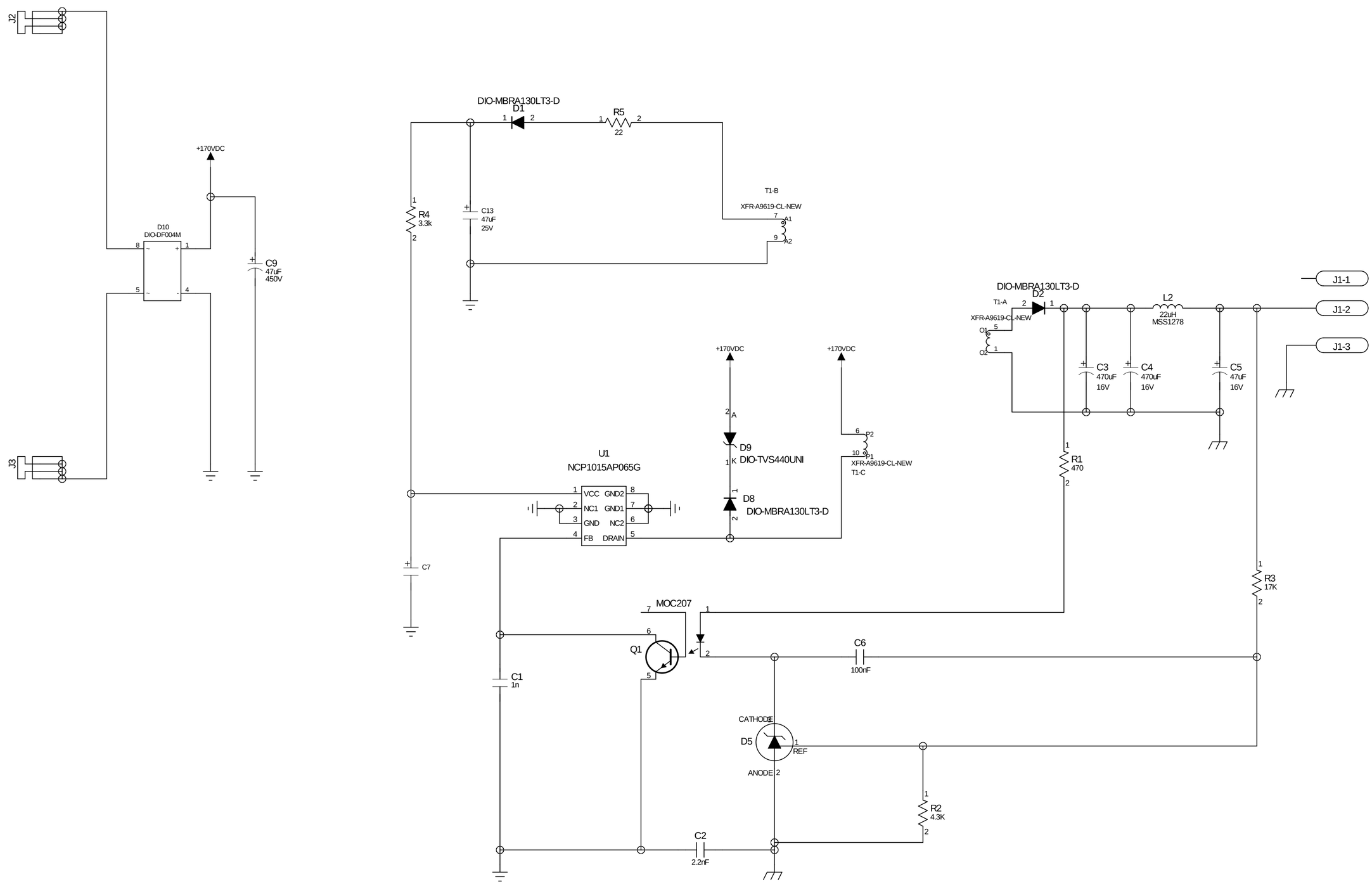

REV	PSU	PAGE
1	TOM BLITCH	1